RAMM
SEISMIC PROTECTION SYSTEMS
the new generation for earthquake isolation

RAMM Seismic Protection System was developed by Rolf Riesbeck and is currently pending patent. It provides an innovative solution for the isolation of seismic oscillation. It protects buildings, facilities and bridges more effectively than currently existing technologies. The system avoids the disadvantages of current technologies:

1. No thermal stress caused by friction of gliding planes
2. No vertical up and down movements on the z axis, which are typically created by seismic activity in directions x and y
3. Automatic reset to zero point, triggered by the weight of the construction
4. The system does not have to be reset after seismic activity, and regular service intervals are not necessary
5. Production exclusively on automatic laser cutters and welders

The ***RAMM Seismic Protection System*** offers a solution consisting of a seismic oscillation dampener which uses 4 concave surfaces to balance the oscillations of seismic activity. For this, the paired concave surfaces on the x axis, and the concave surfaces on the y axis are placed at 90 degrees to each other, thereby developing separate directions of travel for x and y. The concave surfaces of the middle plane are a fitted component of identical lamellas, and this is consistent throughout the construction. This component, with always one concave surface turned by 90 degrees, swings with the waves, balancing the seismic oscillations. It can be constructed in a very short time period and can be form-fittingly connected to the inside clamping shafts. This also occurs with the concave surfaces on the matching ground plates. A lock and suspension system guarantees a form-fit in this system even under great vertical pressure. Roll friction causes the smallest loss and doesn't show noticeable thermal stress. These factors are considered the most important in the development of this design, setting it apart from current technologies, due to the fact that long lasting seismic activity can put such an amount of thermal stress on gliding planes, that such a construction can be fused and destroyed through friction. The load bearing shafts in the ***RAMM System*** are arranged in a geometric fashion and are positioned so that there are no vertical movements between the ground plates during pendulous movements. The system buffers even the smallest seismic activity through the shafts.

Please note that in addition to the illustrations, which were drawn using the CAD construction program Inventor 2008, an ultra-flat round system solution can be produced based on the same mathematical geometry. This can be achieved by positioning ball bearings on a circular path which are identical to the calculated position of the shafts. This solution also fulfills the criteria of the differentiated movements in the heavier construction. This structural solution could be used for lower vertical pressures. It is applicable for highly sensitive installations, disengaging them from seismic activity. However this solution can only partially be produced on laser cutters. Rather it would be produced on a Carousel or 5 way CNC drilling and milling machine.

The criteria mentioned on points 1 to 5 describe the advantages of the ***RAMM Seismic Protection System*** compared to current technologies. An important factor in the design of this solution was also to produce a cost effective system which can offer modern techniques in an innovative application. Laser cutting of high-tensile and abrasion resistant steel allows for a high amount of precision and guarantees an end construction free of defects which raises the quality of the product. The system can be utilized for a wide range of sizes and oscillation amplitudes. The system can be easily visualized using computer simulation, which makes it possible to realistically depict the customers' wishes and to use this information in the actual construction. The construction time is dictated by the size of the system. This method of construction allows for systems accommodating oscillation amplitudes from 100 up to 6000 mm. The construction times of these systems are unsurpassable due to the use of laser cutting and welding technology.

With these construction methods and well-trained and competent personnel, a highly economical result can be achieved. It can be estimated that the ***RAMM Seismic Protection System*** can reduce costs by at least 25%. If the aspect of reduced service intervals is included, an even higher cost-effectiveness is achievable.

The ***RAMM Seismic Protection System*** provides a system solution that allows a wide range of applications, ranging from smaller objects, buildings and bridges up to industrial facilities. It fulfils the highest standards and can also protect smaller objects in seismically active regions.

Contact: Rolf Riesbeck, ROLFformerEngineering AG, Telephone: +49-4362-904007, Mobil: +49-1520-406 3980
E-mail: rolfriesbeck@aol.com ROLFformerAG@aol.com

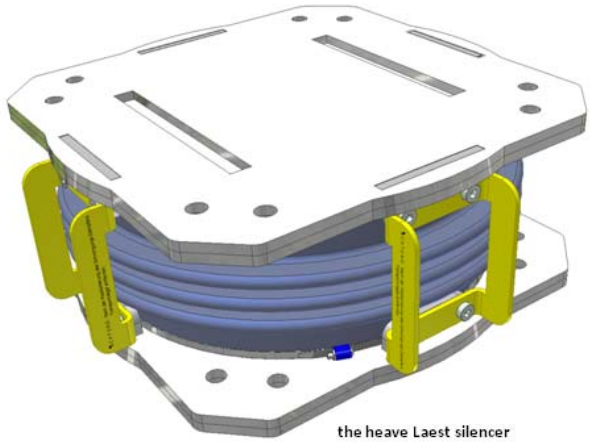

the heave Laest silencer

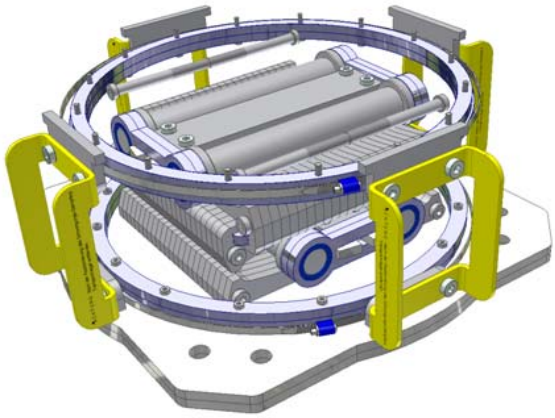

RAMM

SEISMIC PROTECTION SYSTEMS

the new generation for earthquake isolation

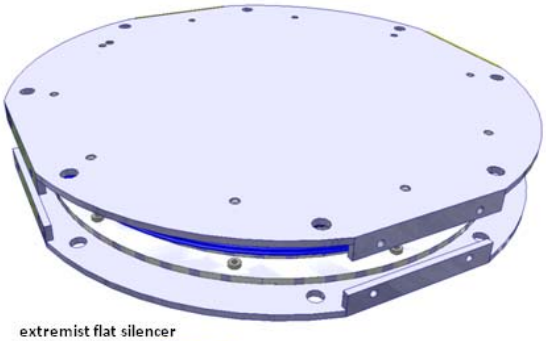

extremist flat silencer

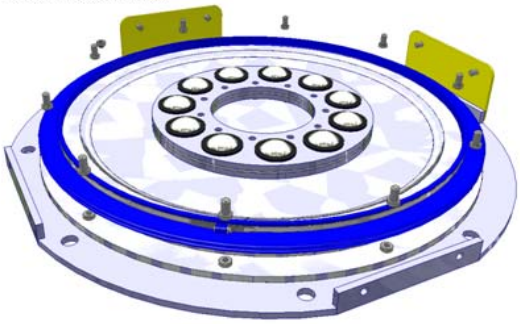

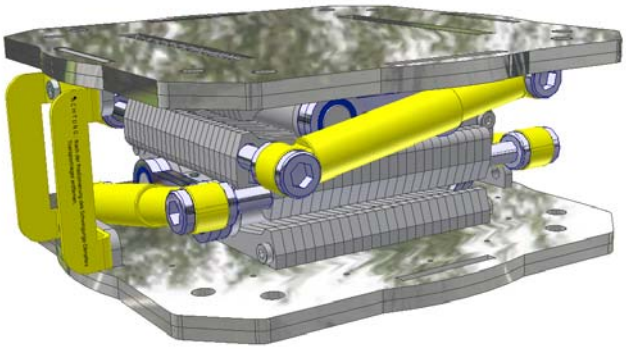

the haeve Least silencer with an integrated recession